FLIR T530 24° + 14°

P/N: 79304-0101

Copyright

© 2017, FLIR Systems, Inc.

All rights reserved worldwide. Names and marks appearing herein are either registered trademarks or trademarks of FLIR Systems and/or its subsidiaries. All other trademarks, trade names or company names referenced herein are used for identification only and are the property of their respective owners.

Document identity

Publ. No.: 79304-0101
Release:
Commit: 42512
Language: en-US
Modified: 2017-05-08
Formatted: 2017-05-09

Website

http://www.flir.com

Customer support

http://support.flir.com

Disclaimer

Specifications subject to change without further notice. Camera models and accessories subject to regional market considerations. License procedures may apply. Products described herein may be subject to US Export Regulations. Please refer to exportquestions@flir.com with any questions.

Imaging and optical data	
Infrared resolution	320 × 240 pixels
UltraMax (super-resolution)	In FLIR Tools
NETD	• <30 mK, 42° @ +30°C (+86°F) • <40 mK, 24° @ +30°C (+86°F) • <50 mK, 14° @ +30°C (+86°F)
Field of view	• 42° × 32° • 24° × 18° • 14° × 10°
Minimum focus distance	• 0.15 m (0.49 ft.), 42° • 0.15 m (0.49 ft.), 24° • 1.0 m (3.28 ft.), 14° • Macro mode 103 µm as option to 24°
Minimum focus distance with MSX	• 0.65 m (2.13 ft.), 42° • 0.5 m (1.64 ft.), 24° • 1.0 m (3.28 ft.), 14°
Focal length	• 10 mm (0.39 in.), 42° • 17 mm (0.67 in.), 24° • 29 mm (1.41 in.), 14°
Spatial resolution (IFOV)	• 2.41 mrad/pixel, 42° • 1.31 mrad/pixel, 24° • 0.75 mrad/pixel, 14°
Available extra lenses	• 42°
Lens identification	Automatic
f number	• 1.1, 42° • 1.3, 24° • 1.5, 14°
Image frequency	30 Hz
Focus	• Continuous LDM • One-shot LDM • One-shot contrast • Manual

Vertrieb für Österreich:

www.nbn.at

nbn Elektronik Handelsgesellschaft m.b.H.
Riesstraße 146, 8010 Graz | Tel. +43 316 40 28 05 | Fax +43 316 40 25 06

FLIR T530 24° + 14°

P/N: 79304-0101
© 2017, FLIR Systems, Inc.
#79304-0101; r. /42512; en-US

Imaging and optical data	
Field of view match	Yes
Digital zoom	1–4× continuous

Detector data	
Focal plane array/spectral range	Uncooled microbolometer/7.5–14 µm
Detector pitch	17 µm

Image presentation	
Resolution	640 × 480 pixels (VGA)
Surface brightness (cd/m²)	400
Screen size	4 in.
Viewing angle	80°
Color depth (bits)	24
Aspect ratio	4:3
Auto-rotation	Yes
Touchscreen	Optically bonded PCAP
Display technology	IPS
Cover glass material	Dragontrail®
Programmable buttons	2
Viewfinder	No
Image adjustment	• Automatic • Automatic maximum • Automatic minimum • Manual

Image presentation modes	
Infrared image	Yes
Visual image	Yes
MSX	Yes
Picture in picture	Resizable and movable
Gallery	Yes

Measurement	
Object temperature range	• –20 to +120°C (–4 to +248°F) • 0–650°C (32–1202°F) • Optional: 300–1200°C (572–2200°F)
Accuracy	±2°C (±3.6°F) or ±2% of reading, for ambient temperature 15–35°C (59–95°F) and object temperature above 0°C (32°F)

Measurement analysis	
Spotmeter	3 in live mode
Area	3 in live mode
Automatic hot/cold detection	Automatic maximum/minimum markers within area
Color alarm (Isotherm)	• Above • Below • Interval • Condensation • Insulation

FLIR T530 24° + 14°

P/N: 79304-0101
© 2017, FLIR Systems, Inc.
#79304-0101; r. /42512; en-US

Measurement analysis	
Measurement presets	• No measurements • Center spot • Hot spot • Cold spot • User preset 1 • User preset 2
Difference temperature	Yes
Reference temperature	Yes
Emissivity correction	Yes, variable from 0.01 to 1.0 or selected from materials list
Measurement corrections	Yes
External optics/windows correction	Yes
Screening	0.5°C (0.9°F) accuracy at 37°C (98.6°F) with reference

Alarm	
Moisture alarm	Yes
Insulation alarm	Yes
Measurement alarm	Audible/visual alarms above/below

Set-up	
Color palettes	• Iron • Gray • Rainbow • Arctic • Lava • Rainbow HC
Setup commands	Local adaptation of units, language, date, and time formats
Languages	21

Service functions	
Camera software update	Use PC software FLIR Tools

Storage of images	
Storage media	Removable memory: SD card
Time lapse (Periodic image storage)	10 seconds to 24 hours (infrared)
Remote control operation	• Using FLIR Tools (using USB cable) • FLIR Tools Mobile (over Wi-Fi)
Image file format	Standard JPEG, measurement data included. Infrared-only mode

Image annotations	
Voice	60 seconds with built-in microphone and speaker (and via Bluetooth) on still images and video
Text	Text from predefined list or soft keyboard on touchscreen
Visual image annotation	Yes
Image sketch	Yes: on infrared only
Sketch	From touchscreen
METERLiNK	Yes, several readings

P/N: 79304-0101
© 2017, FLIR Systems, Inc.
#79304-0101; r. /42512; en-US

Image annotations	
Area measurement information	Yes
GPS	Location data automatically added to every still image and first frame in video from built-in GPS

Video recording in camera	
Radiometric infrared-video recording	RTRR (.csq)
Non-radiometric infrared-video recording	H.264 to memory card
Visual video recording	H.264 to memory card

Video streaming	
Radiometric infrared-video streaming (compressed)	Over UVC or RTSP (Wi-Fi)
Non-radiometric video streaming (compressed: IR, MSX, visual, Picture in Picture)	• H.264 (AVC) over RTSP (Wi-Fi) • MPEG4 over RTSP (Wi-Fi) • MJPEG over UVC and RTSP (Wi-Fi)
Visual video streaming	Yes

Digital camera	
Resolution	5 MP with LED light
Focus	Fixed
Field of view	53° × 41°
Video lamp	Built-in LED light

Laser pointer	
Laser alignment	Position is automatically displayed on the infrared image
Laser distance meter	Activated by dedicated button
Laser	Class 2, 0.05–40 m (1.6–130 ft.) ±1% of measured distance

Data communication interfaces	
Interfaces	USB 2.0, Bluetooth, Wi-Fi, DisplayPort
Bluetooth	Communication with headset and external sensors
Wi-Fi	Peer to peer (ad hoc) or infrastructure (network)
Audio	Microphone and speaker for voice annotation of images
USB	USB Type-C: data transfer/video/power
USB standard	USB 2.0 High Speed
Video out	DisplayPort
Video connector type	DisplayPort over USB Type-C

Power system	
Battery type	Rechargeable Li-ion battery
Battery voltage	3.6 V
Battery operating time	> 4 hours at 25°C (68°F) with typical use
Charging system	In camera (AC adapter or 12 V from a vehicle) or two-bay charger
Charging time (using two-bay charger)	3.5 h to 90% capacity, on-screen indicator

FLIR T530 24° + 14°

P/N: 79304-0101
© 2017, FLIR Systems, Inc.
#79304-0101; r. /42512; en-US

Power system	
External power operation	AC adapter 90–260 V AC (50/60 Hz) or 12 V from a vehicle (cable with standard plug, optional)
Power management	Automatic shut-down and sleep mode

Environmental data	
Operating temperature range	–15 to +50°C (5–122°F)
Storage temperature range	–40 to +70°C (–40 to 158°F)
Humidity (operating and storage)	IEC 60068-2-30/24 hours, 95% relative humidity, 25–40°C (77–104°F)/2 cycles
EMC	• ETSI EN 301 489-1 (radio) • ETSI EN 301 489-17 • EN 61000-6-2 (immunity) • EN 61000-6-3 (emission) • FCC 47 CFR Part 15 Class B (emission)
Radio spectrum	• ETSI EN 300 228 • FCC Part 15.249 • RSS-247
Encapsulation	IP 54 (IEC 60529)
Shock	25g (IEC 60068-2-27)
Vibration	2g (IEC 60068-2-6)
Safety	EN/UL/CSA/PSE 60950-1

Physical data	
Weight (including battery)	1.3 kg (2.9 lb.)
Size (L × W × H)	• Lens vertical: 140 × 201.3 × 84.1 mm (5.5 × 7.9 × 3.3 in.) • Lens horisontal: 140 × 201.3 × 167.3 mm (5.5 × 7.9 × 6.6 in.)
Battery weight	195 g (6.89 oz.)
Battery size (L × W × H)	59 × 66 × 94 mm (2.3 × 2.6 × 3.7 in.)
Tripod mounting	UNC ¼″-20
Housing material	PCABS with TPE, magnesium
Color	Black

Warranty and service	
Warranty	http://www.flir.com/warranty/

FLIR T530 24° + 14°

P/N: 79304-0101
© 2017, FLIR Systems, Inc.
#79304-0101; r. /42512; en-US

Shipping information	
Packaging, type	Cardboard box
Packaging, contents	• Accessory box I: ◦ Power supply for battery charger ◦ Power supply, 15 W/3 A ◦ Printed documentation ◦ SD card (8 GB) ◦ USB 2.0 A to USB Type-C cable, 1.0 m ◦ USB Type-C to HDMI adapter, standard specification UH311 ◦ USB Type-C to USB Type-C cable (USB 2.0 standard), 1.0 m • Accessory box II: ◦ Lanyard strap, battery charger ◦ Lens cap strap ◦ Lens cleaning cloth ◦ Neck strap • Battery (2 ea) • Battery charger • Extra lens, 14° • Hard transport case • Infrared camera with lens • Lens cap, front • Lens cap, front and rear (only for extra lenses)
Packaging, weight	
Packaging, size	500 × 190 × 370 mm (19.7 × 7.5 × 14.6 in.)
EAN-13	7332558012949
UPC-12	845188014636
Country of origin	Sweden and/or Estonia

Supplies and accessories:

- T198495; Pouch for FLIR T6xx and T4xx series
- T911705ACC; USB Type-C to USB Type-C cable (USB 2.0 standard), 1.0 m
- T911632ACC; USB Type-C to HDMI adapter, standard specification UH311
- T911631ACC; USB 2.0 A to USB Type-C cable, 0.9 m
- T911630ACC; Power supply for camera, 15 W/3 A
- T911633ACC; Power supply for battery charger
- T199610; Battery charger
- T199300ACC; Battery
- T199601; Hand strap and neck strap
- T199347ACC; Hard transport case
- T199616; High temperature option, +300 to +1200°C
- T198583; FLIR Tools+ (download card incl. license key)

Vertrieb für Österreich:

www.nbn.at

nbn Elektronik Handelsgesellschaft m.b.H.
Riesstraße 146, 8010 Graz | Tel. +43 316 40 28 05 | Fax +43 316 40 25 06

Camera housing

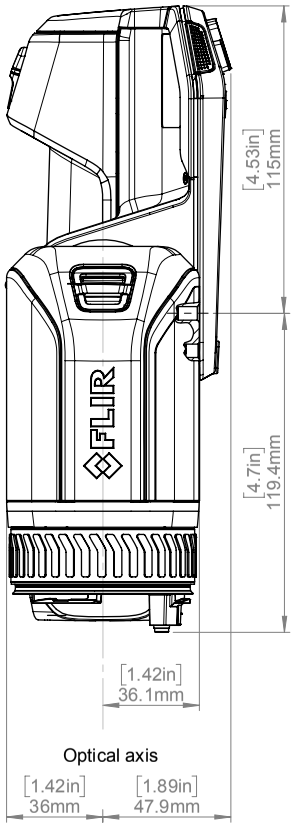

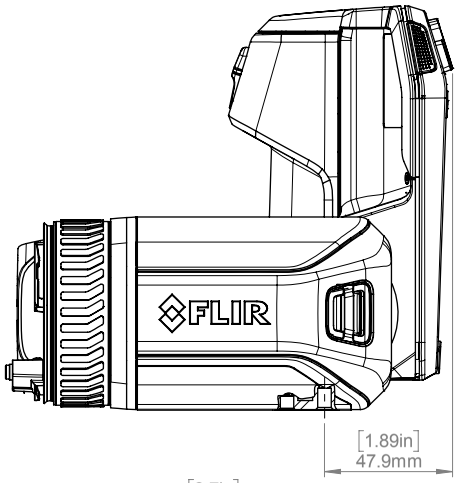

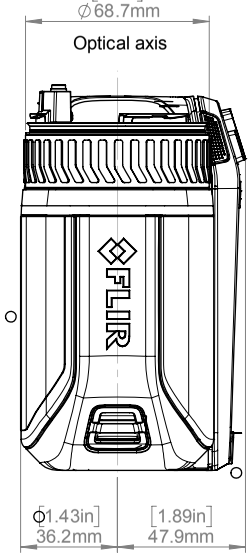

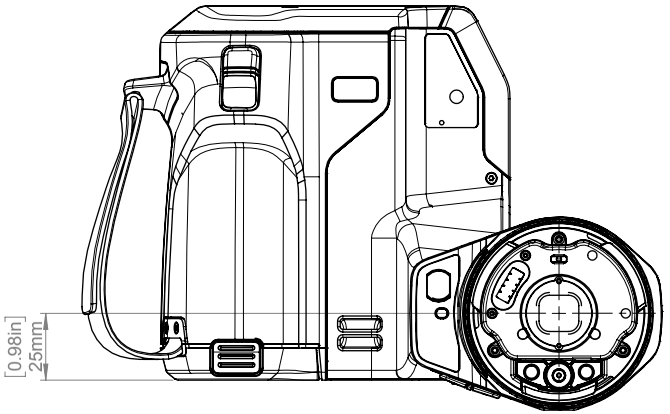

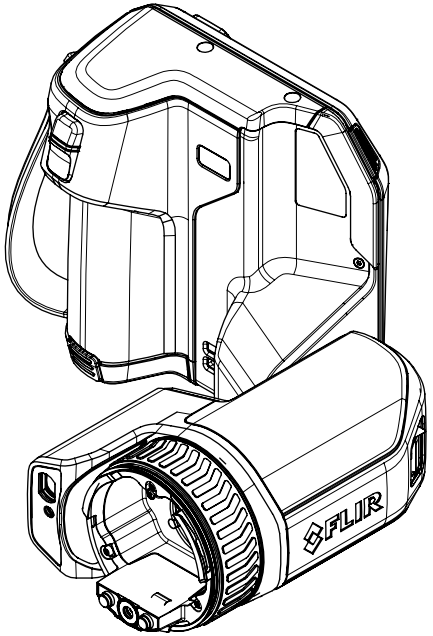

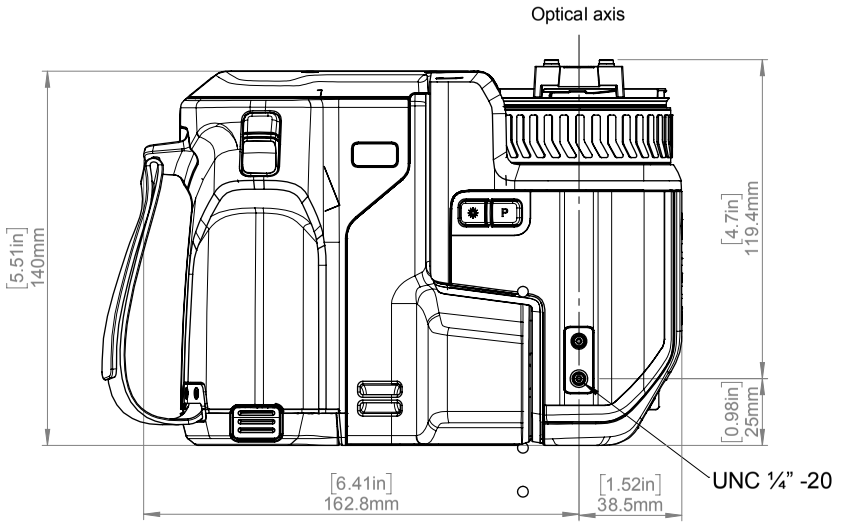

Modified: 2017-02-17	Check: -	Drawn by: R&D Instruments	FLIR
Denomination: Basic dimensions FLIR T5xx		Size: A3	
		Scale: 1:2	Sheet: 1(3)
		Drawing No.: T129991	Rev: A

© 2016, FLIR Systems, Inc. All rights reserved worldwide. No part of this drawing may be reproduced, stored in a retrieval system, or transmitted in any form, or by any means, electronic, mechanical, photocopying, recording, or otherwise, without written permission from FLIR Systems, Inc. Specifications subject to change without further notice. Dimensional data is based on nominal values. Products may be subject to regional market considerations. License procedures may apply. Product may be subject to US Export Regulations. Please refer to exportquestions@flir.com with any questions. Diversion contrary to US law is prohibited.

Camera with Lens IR f=10mm (42°)
Camera with Lens IR f=17mm (24°)
Camera with Lens IR f=29mm (14°)

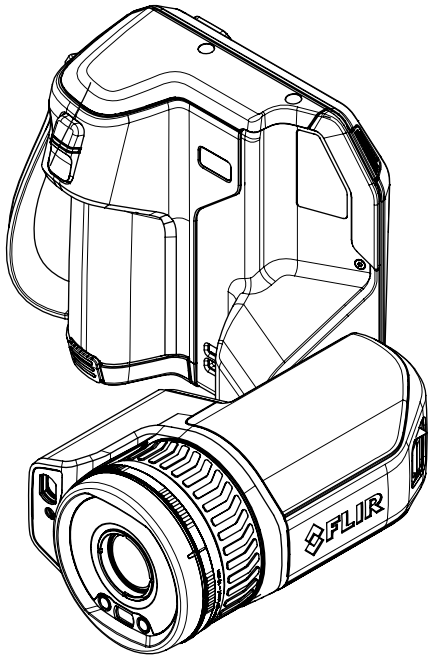

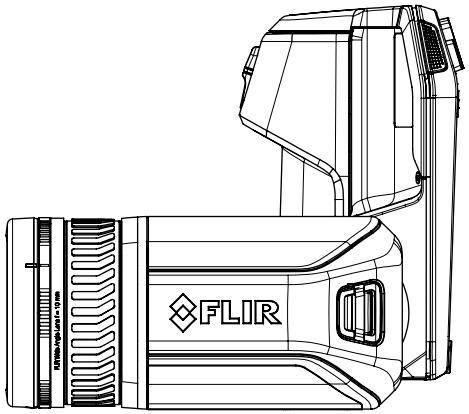

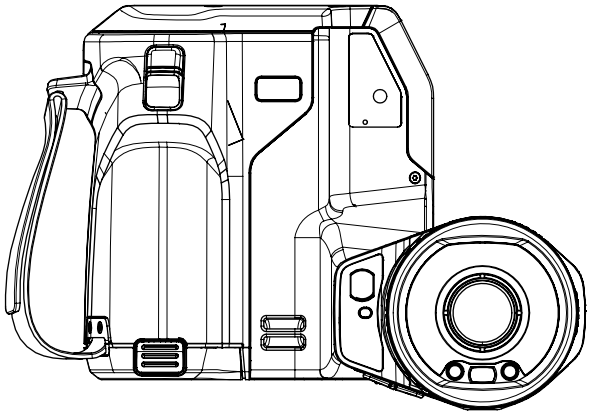

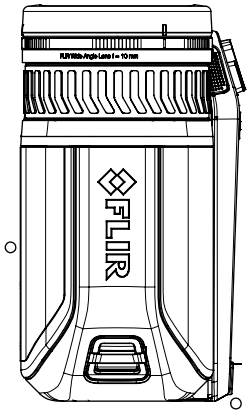

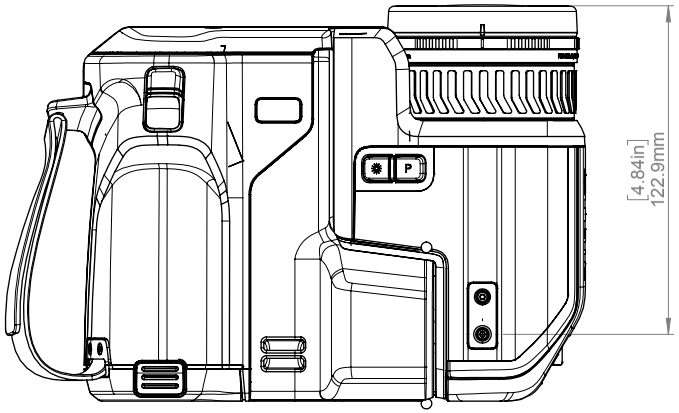

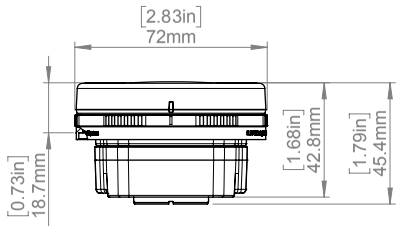

For additional dimensions see page 1

Modified	Check	Drawn by
2017-02-17	-	R&D Instruments

Denomination

Basic dimensions FLIR T5xx

Size	Sheet
A3	2(3)

Scale 1:5

Drawing No.	Rev
T129991	A

© 2016, FLIR Systems, Inc. All rights reserved worldwide. No part of this drawing may be reproduced, stored in a retrieval system, or transmitted in any form, or by any means, electronic, mechanical, photocopying, recording, or otherwise, without written permission from FLIR Systems, Inc. Specifications subject to change without further notice. Dimensional data is based on nominal values. Products may be subject to regional market considerations. License procedures may apply. Product may be subject to US Export Regulations. Please refer to exportquestions@flir.com with any questions. Diversion contrary to US law is prohibited.

Battery Charger

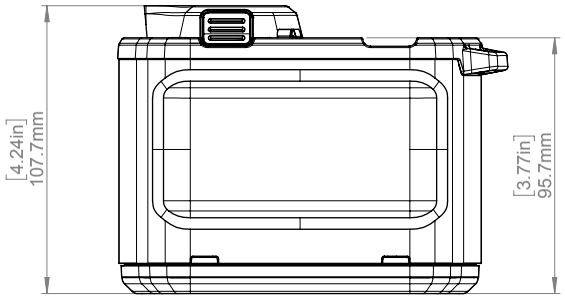

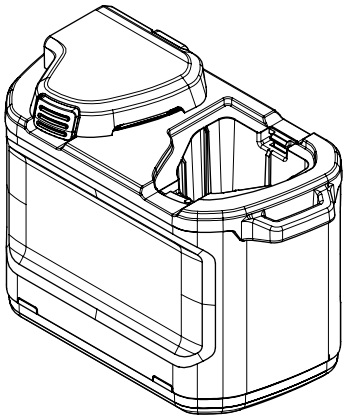

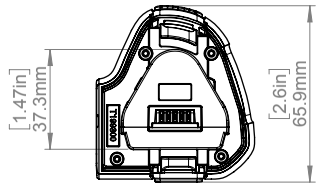

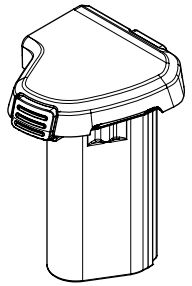

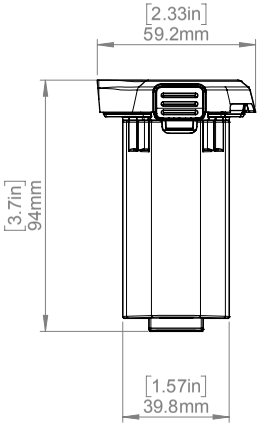

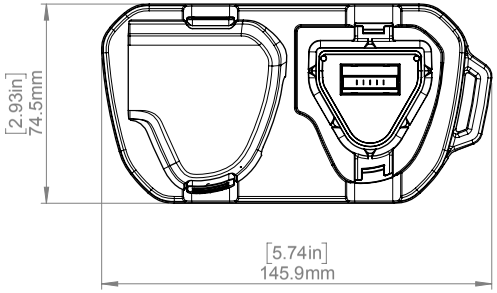

Modified	Check	Drawn by
2017-02-17	-	R&D Instruments

Denomination

Basic dimensions FLIR T5xx

Size	Sheet
A3	3(3)

Scale	Drawing No.	Rev
1:5	T129991	A

© 2016, FLIR Systems, Inc. All rights reserved worldwide. No part of this drawing may be reproduced, stored in a retrieval system, or transmitted in any form, or by any means, electronic, mechanical, photocopying, recording, or otherwise, without written permission from FLIR Systems, Inc. Specifications subject to change without further notice. Dimensional data is based on nominal values. Products may be subject to regional market considerations. License procedures may apply. Product may be subject to US Export Regulations. Please refer to exportquestions@flir.com with any questions. Diversion contrary to US law is prohibited.