Technical Data
FLIR A300

Part number:
48201-1001

Copyright

© 2013, FLIR Systems, Inc.

All rights reserved worldwide. Names and marks appearing herein are either registered trademarks or trademarks of FLIR Systems and/or its subsidiaries. All other trademarks, trade names or company names referenced herein are used for identification only and are the property of their respective owners.

March 06, 2013, 04:34 AM

Corporate Headquarters

FLIR Systems, Inc.
27700 SW Parkway Ave.
Wilsonville, OR 97070
USA
Telephone: +1-503-498-3547

Website

http://www.flir.com

Customer support

http://support.flir.com

Legal disclaimer

Specifications subject to change without further notice. Camera models and accessories subject to regional market considerations. License procedures may apply.

Information and equipment described herein may require US Government authorization for export purposes. Diversion contrary to US law is prohibited.

Imaging and optical data	
IR resolution	320 × 240 pixels
Thermal sensitivity/NETD	< 0.05°C @ +30°C (+86°F) / 50 mK
Field of view (FOV) / Minimum focus distance	25° × 18.8° / 0.4 m (1.31 ft.)
Focal length	18 mm (0.7 in.)
Spatial resolution (IFOV)	1.36 mrad
Lens identification	Automatic
F-number	1.3
Image frequency	30 Hz
Focus	Automatic or manual (built in motor)
Zoom	1–8× continuous, digital, interpolating zooming on images

Detector data	
Focal Plane Array (FPA) / Spectral range	Uncooled microbolometer / 7.5–13 µm
Detector pitch	25 µm
Detector time constant	Typical 12 ms

Measurement	
Object temperature range	–20 to +120°C (–4 to +248°F) 0 to +350°C (+32 to +662°F)
Accuracy	±2°C (±3.6°F) or ±2% of reading

Set-up	
Color palettes	Color palettes (BW, BW inv, Iron, Rain)
Set-up commands	Date/time, Temperature°C/°F

Storage of images	
Storage media	Built-in memory for image storage
File formats	Standard JPEG, 16-bit measurement data included

Ethernet	
Ethernet	Control and image
Ethernet, type	100 Mbps
Ethernet, standard	IEEE 802.3
Ethernet, connector type	RJ-45
Ethernet, communication	TCP/IP socket-based FLIR proprietary
Ethernet, video streaming	MPEG-4, ISO/IEC 14496-1 MPEG-4 ASP@L5
Ethernet, image streaming	16-bit 320 × 240 pixels @ 3 Hz - Radiometric
Ethernet, power	Power over Ethernet, PoE IEEE 802.3af class 0
Ethernet, protocols	TCP, UDP, SNTP, RTSP, RTP, HTTP, ICMP, IGMP, ftp, SMTP, SMB (CIFS), DHCP, MDNS (Bonjour), uPnP

P/N: 48201-1001

© 2013, FLIR Systems, Inc.
All rights reserved worldwide.

Digital input/output	
Digital input, purpose	Image tag (start/stop/general), Input ext. device (programmatically read)
Digital input	2 opto-isolated, 10–30 VDC
Digital output, purpose	Output to ext. device (programmatically set)
Digital output	2 opto-isolated, 10–30 VDC, max 100 mA
Digital I/O, isolation voltage	500 VRMS
Digital I/O, supply voltage	12/24 VDC, max 200 mA
Digital I/O, connector type	6-pole jackable screw terminal

Composite video	
Video out	Composite video output, PAL and NTSC compatible
Video, standard	CVBS (ITU-R-BT.470 PAL/SMPTE 170M NTSC)

Power system	
External power operation	12/24 VDC, 24 W absolute max
External power, connector type	2-pole jackable screw terminal
Voltage	Allowed range 10–30 VDC

Environmental data	
Operating temperature range	–15°C to +50°C (+5°F to +122°F)
Storage temperature range	–40°C to +70°C (–40°F to +158°F)
Humidity (operating and storage)	IEC 60068-2-30/24 h 95% relative humidity +25°C to +40°C (+77°F to +104°F)
EMC	• EN 61000-6-2:2001 (Immunity) • EN 61000-6-3:2001 (Emission) • FCC 47 CFR Part 15 Class B (Emission)
Encapsulation	IP 40 (IEC 60529)
Bump	25 g (IEC 60068-2-29)
Vibration	2 g (IEC 60068-2-6)

Physical data	
Weight	0.7 kg (1.54 lb.)
Camera size (L × W × H)	170 × 70 × 70 mm (6.7 × 2.8 × 2.8 in.)
Tripod mounting	UNC ¼"-20 (on three sides)
Base mounting	2 × M4 thread mounting holes (on three sides)
Housing material	Aluminum

Shipping information

- Infrared camera with lens
- Calibration certificate
- Cardboard box
- Downloads brochure
- Ethernet™ cable
- FLIR apps card
- FLIR Tools download card
- Getting Started Guide
- Important Information Guide
- Mains cable
- Optics brochure
- Power cable, pig-tailed
- Power supply
- Service & training brochure
- Thank you card
- User documentation CD-ROM
- Utility CD-ROM
- Registration card

Sensorik
Messtechnik
A-8010 Graz, Riesstraße 146
Tel.: +43 316 40 28 05, Fax: 40 25 06
nbn ELEKTRONIK
Handelsgesellschaft m.b.H.

Camera with built-in IR lens f=18 mm (25°)

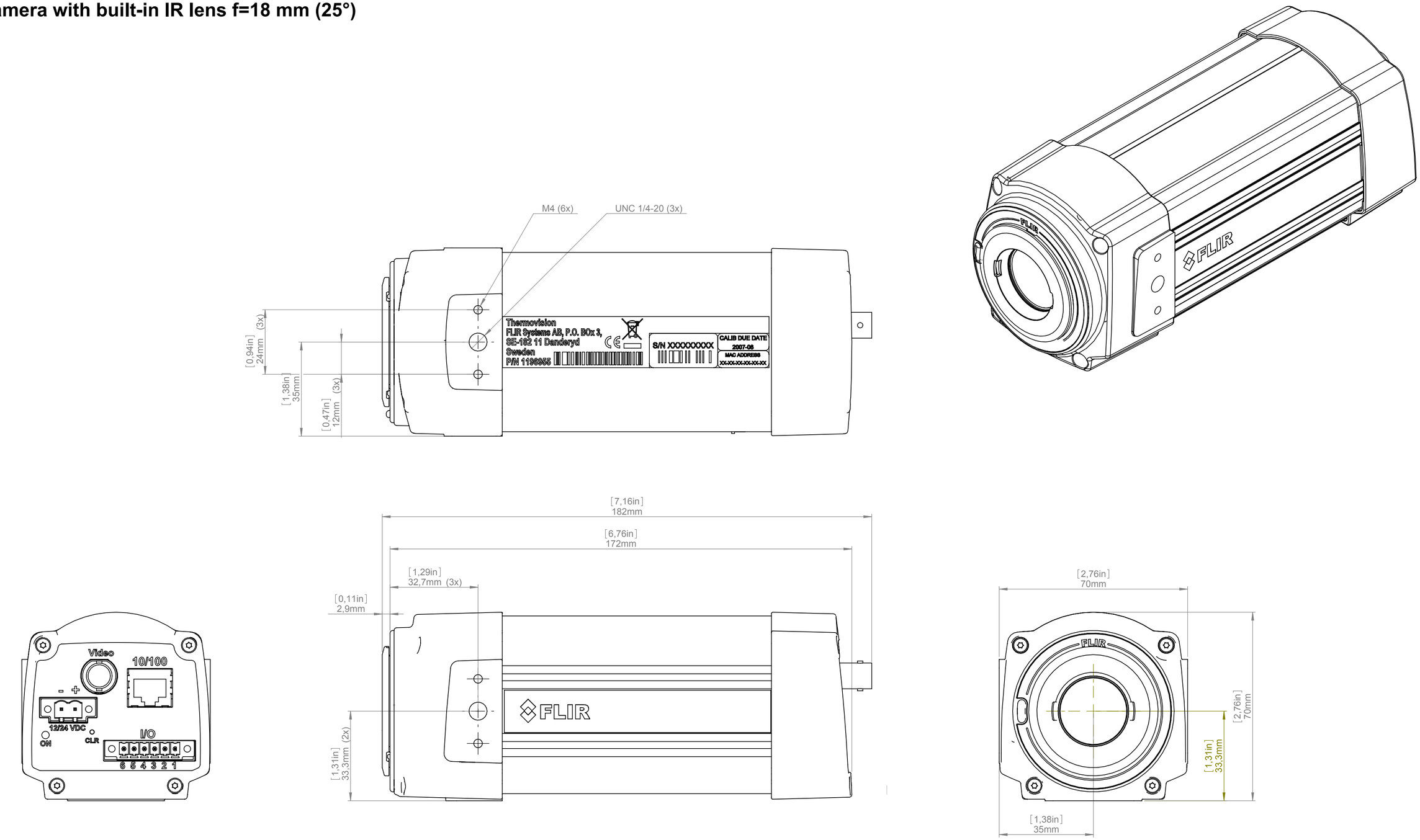

-

Modified	Check	Drawn by	
2012-04-18	CAHA	R&D Thermography	FLIR

Denomination

Basic dimensions FLIR A3xx/SC3xx

-

Size	Scale	Sheet
A3	1:1	1(8)

Drawing No.	Size
T125002	A

© 2012, FLIR Systems, Inc. All rights reserved worldwide. No part of this drawing may be reproduced, stored in a retrieval system, or transmitted in any form, or by any means, electronic, mechanical, photocopying, recording, or otherwise, without written permission from FLIR Systems, Inc. Specifications subject to change without further notice. Dimensional data is based on nominal values. Products may be subject to regional market considerations. License procedures may apply. Product may be subject to US Export Regulations. Please refer to exportquestions@flir.com with any questions. Diversion contrary to US law is prohibited.

Camera with Lens IR f=4 mm (90°) incl support

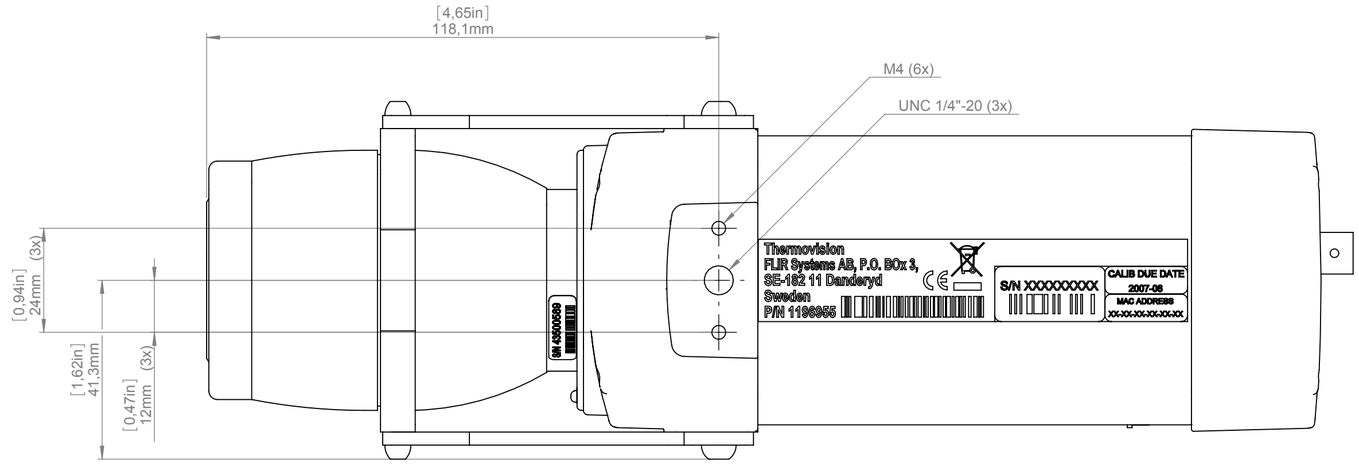

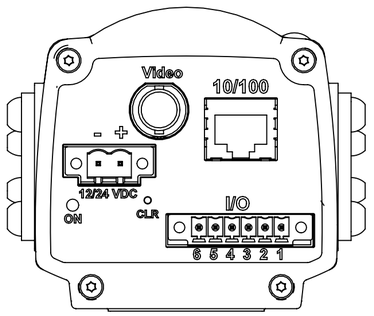

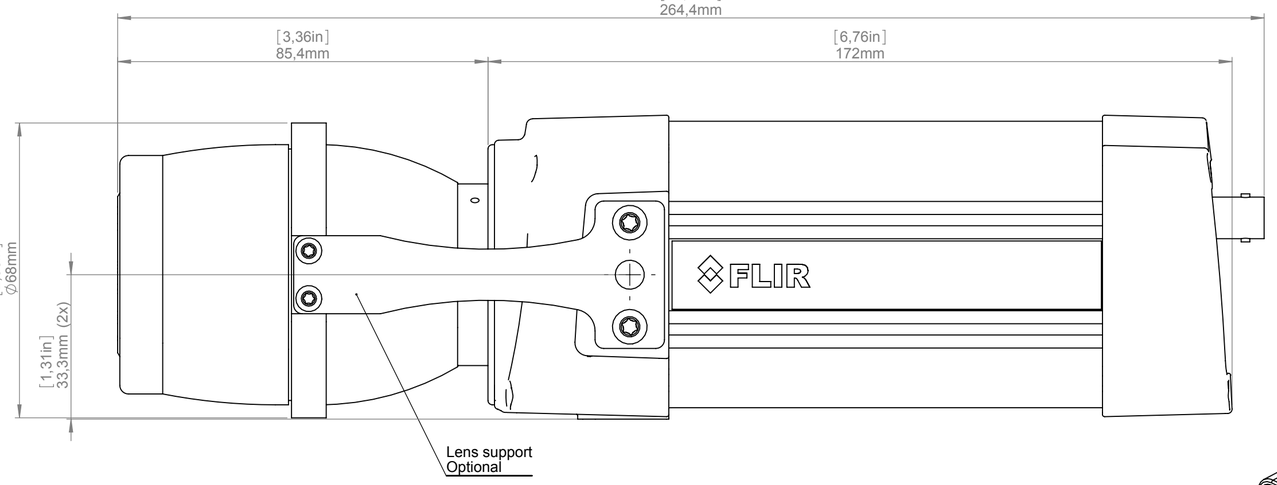

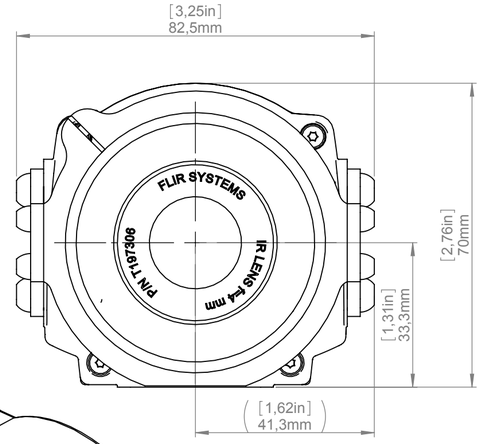

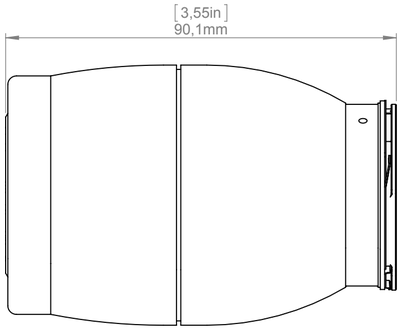

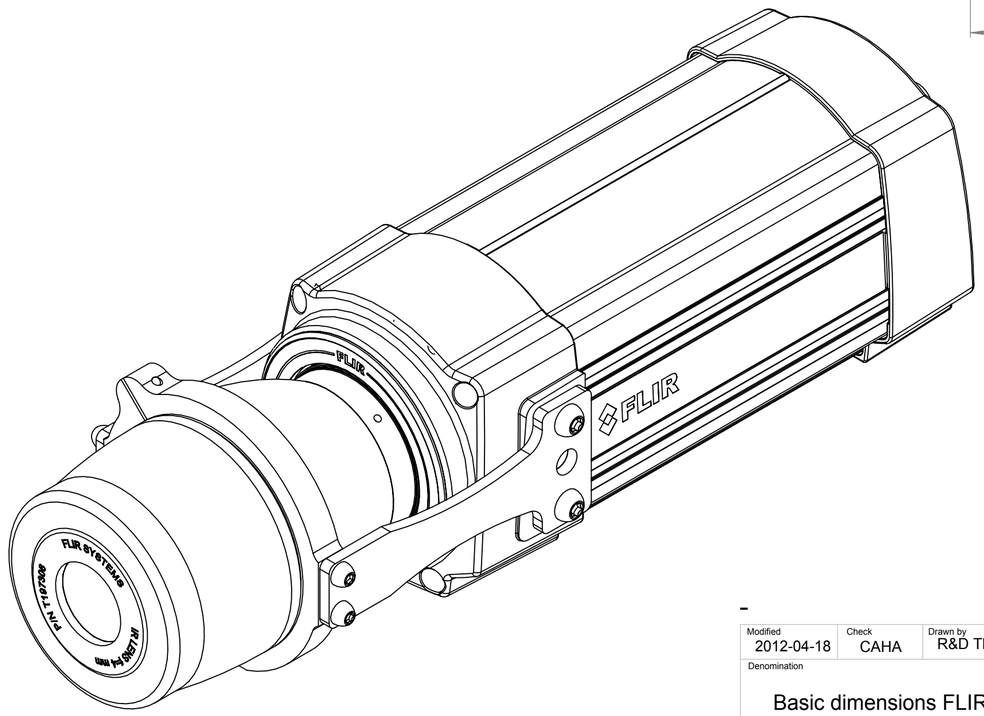

For additional dimensions see page 1

-

Modified	Check	Drawn by	
2012-04-18	CAHA	R&D Thermography	FLIR

Denomination

Basic dimensions FLIR A3xx/SC3xx

-

Size	
A3	
Scale	Sheet
1:1	2(6)
Drawing No.	Size
T125002	A

© 2012, FLIR Systems, Inc., All rights reserved worldwide. No part of this drawing may be reproduced, stored in a retrieval system, or transmitted in any form, or by any means, electronic, mechanical, photocopying, recording, or otherwise, without written permission from FLIR Systems, Inc. Specifications subject to change without further notice. Dimensional data is used and nominal values. Products may be subject to regional market considerations. License procedures may apply. Product may be subject to US Export Regulations. Please refer to exportquestions@flir.com with any questions. Diversion contrary to US law is prohibited.

Camera with Lens IR f=10 mm (45°)

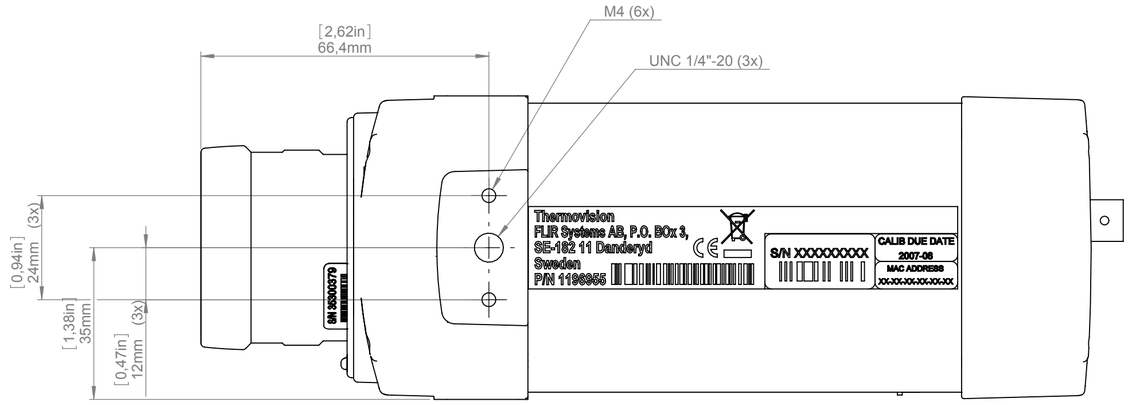

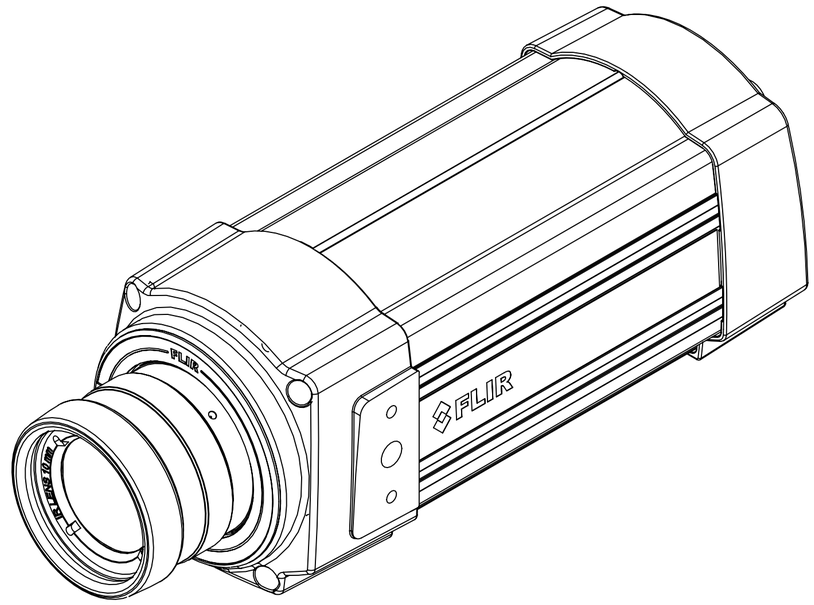

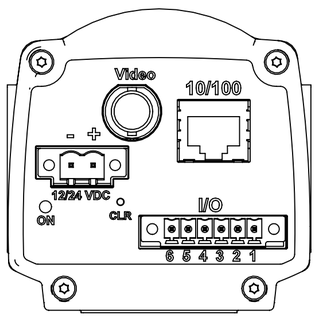

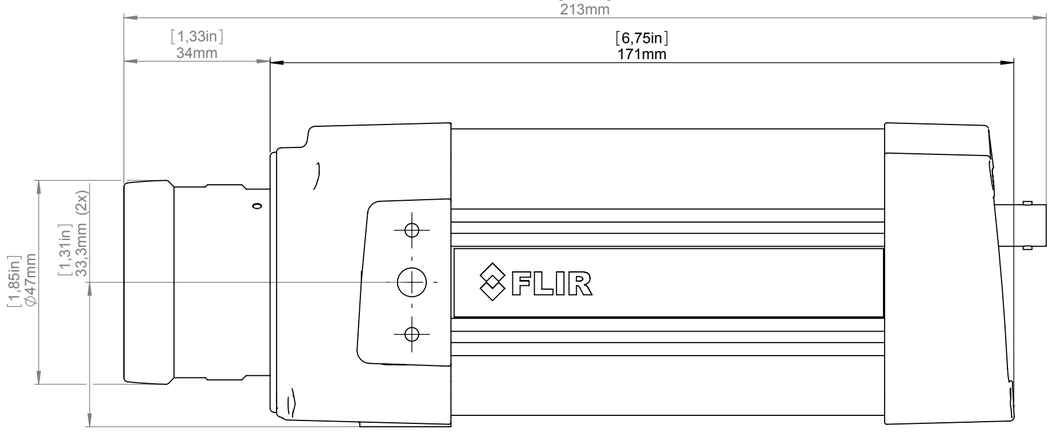

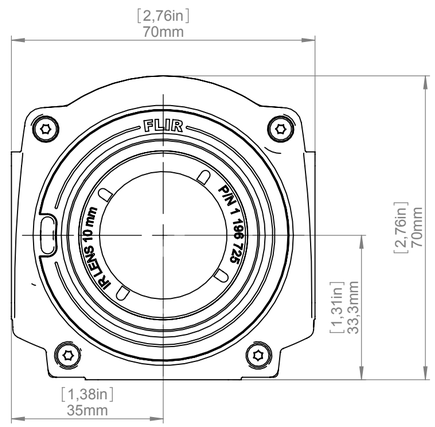

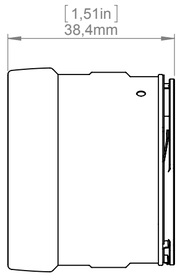

For additional dimensions see page 1

-

Modified	Check	Drawn by	
2012-04-18	CAHA	R&D Thermography	FLIR
Denomination		Size A3	
Basic dimensions FLIR A3xx/SC3xx		Scale 1:1	Sheet 3(8)
-		Drawing No. T125002	Size A

© 2012, FLIR Systems, Inc. All rights reserved worldwide. No part of this drawing may be reproduced, stored in a retrieval system, or transmitted in any form, or by any means, electronic, mechanical, photocopying, recording, or otherwise, without written permission from FLIR Systems, Inc. Specifications subject to change without further notice. Dimensional data is based on nominal values. Products may be subject to regional market considerations. License procedures may apply. Product may be subject to US Export Regulations. Please refer to exportquestions@flir.com with any questions. Diversion contrary to US law is prohibited.

Camera with Lens IR f=30 mm (15°)

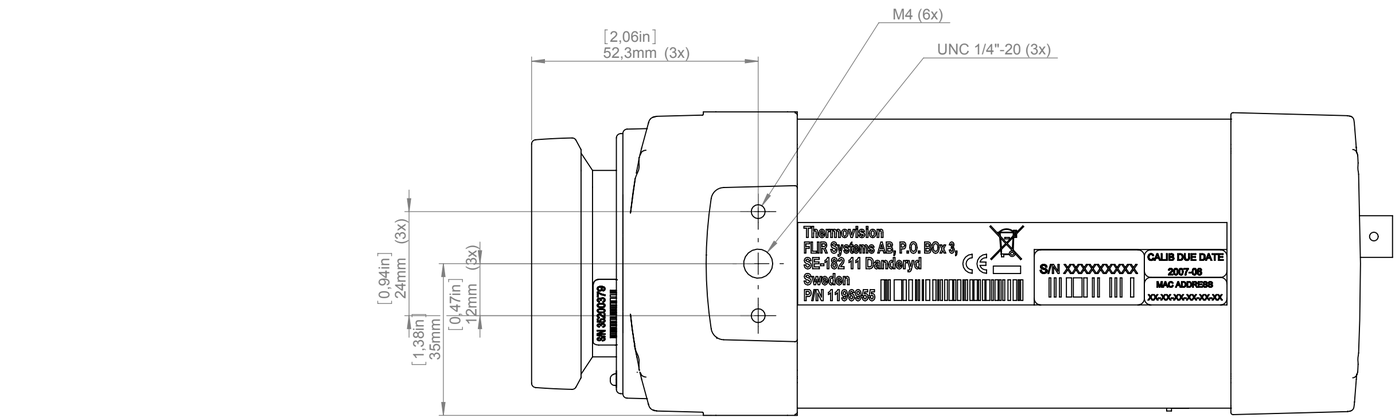

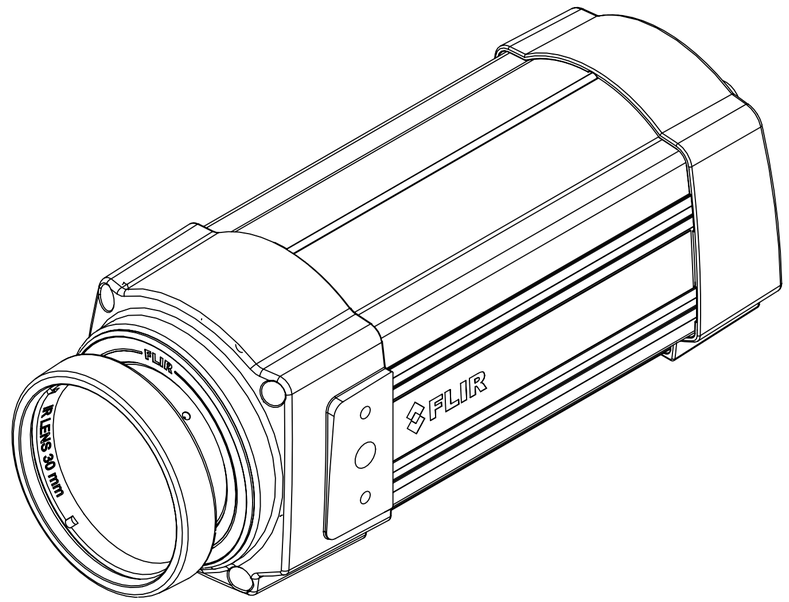

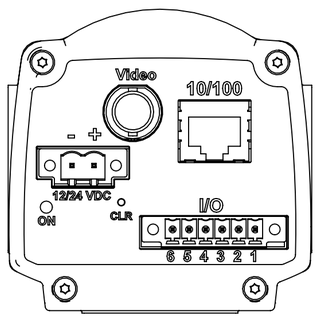

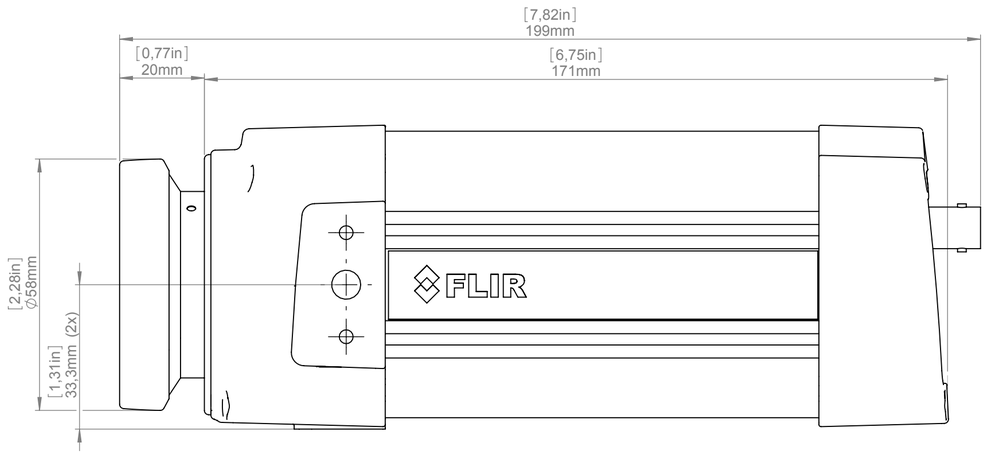

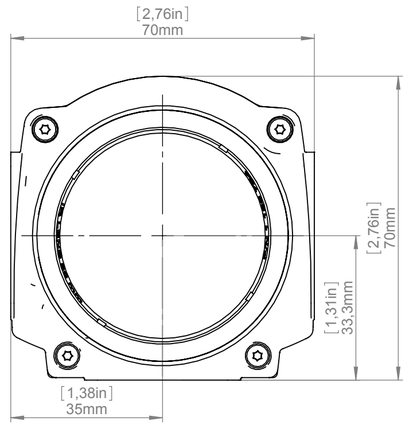

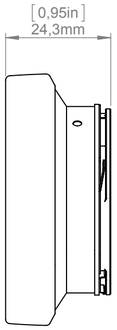

For additional dimensions see page 1

-

Modified	Check	Drawn by	
2012-04-18	CAHA	R&D Thermography	FLIR
Denomination		Size A3	
Basic dimensions FLIR A3xx/SC3xx		Scale 1:1	Sheet 4(8)
-		Drawing No. T125002	Size A

© 2012, FLIR Systems, Inc. All rights reserved worldwide. No part of this drawing may be reproduced, stored in a retrieval system, or transmitted in any form, or by any means, electronic, mechanical, photocopying, recording, or otherwise, without written permission from FLIR Systems, Inc. Specifications subject to change without further notice. Dimensional data is based on nominal values. Products may be subject to regional market considerations. License procedures may apply. Product may be subject to US Export Regulations. Please refer to exportquestions@flir.com with any questions. Diversion contrary to US law is prohibited.

Camera with Lens IR f=76 mm (6°) incl support

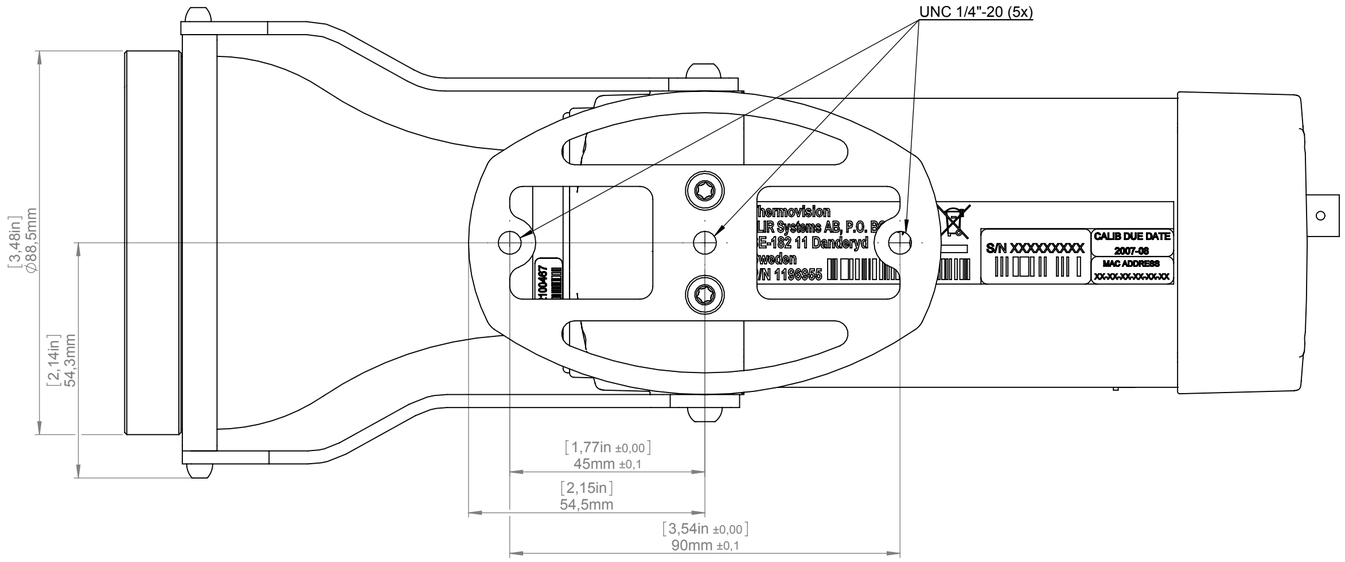

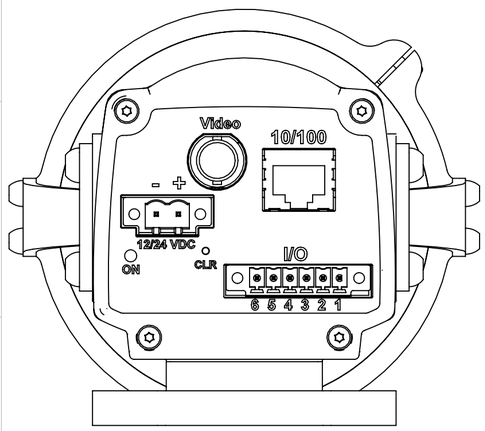

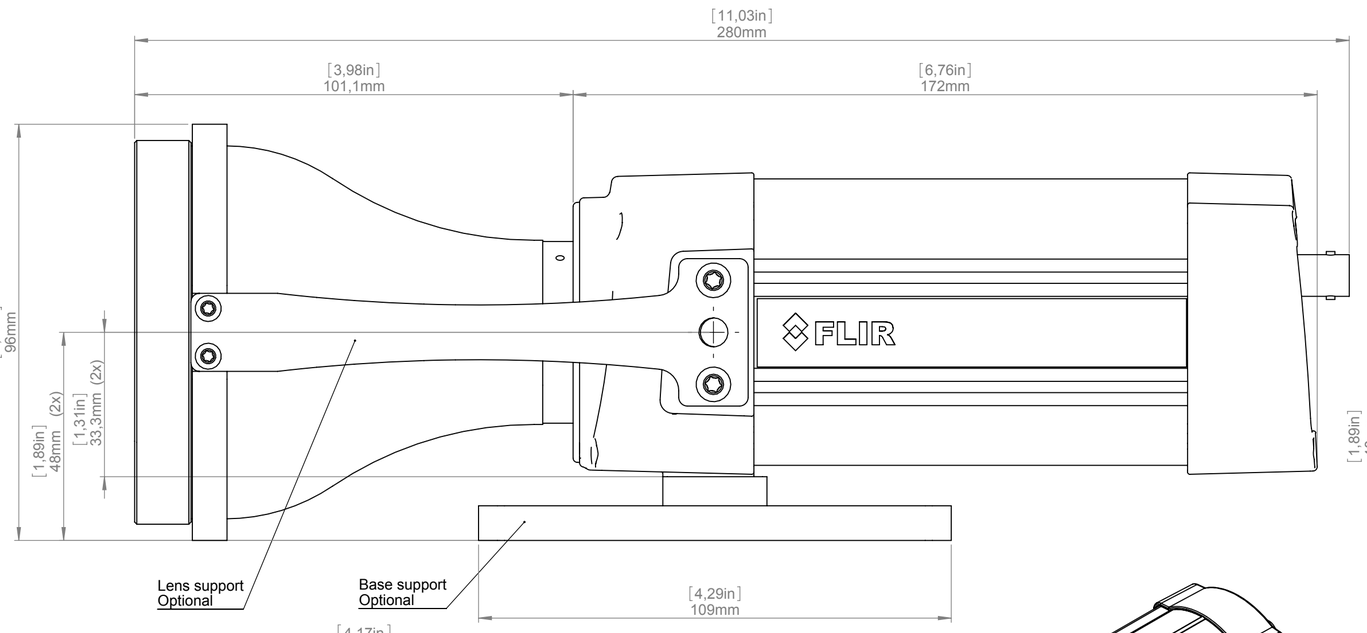

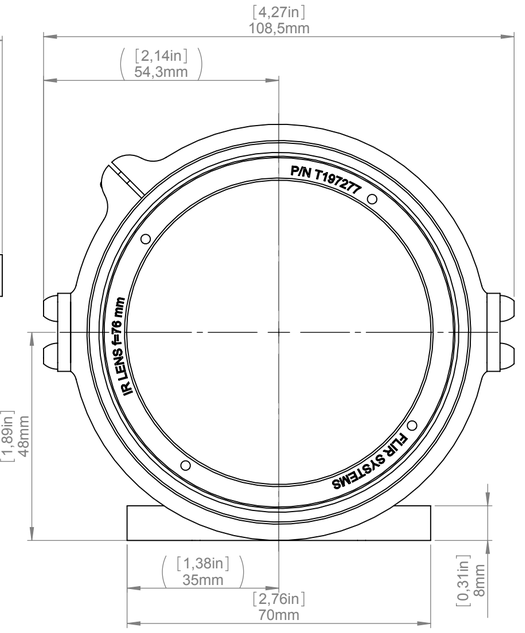

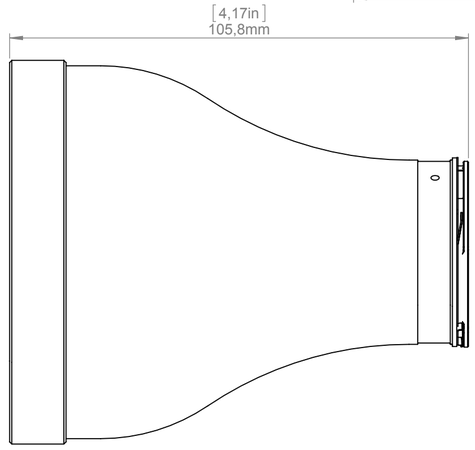

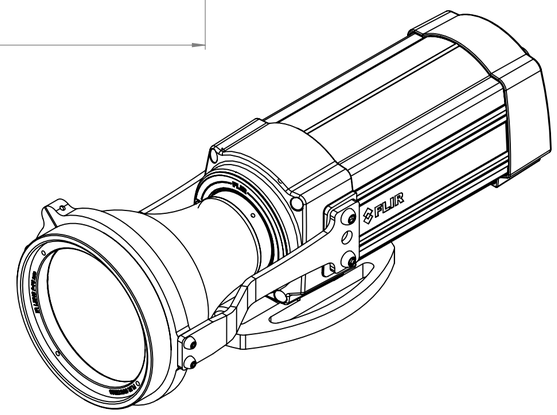

For additional dimensions see page 1

-

Modified	Check	Drawn by
2012-04-18	CAHA	R&D Thermography

Denomination

Basic dimensions FLIR A3xx/SC3xx

-

Size	Sheet
A3	5(8)
Scale 1:1	
Drawing No. T125002	Size A

FLIR

© 2012, FLIR Systems, Inc. All rights reserved worldwide. No part of this drawing may be reproduced, stored in a retrieval system, or transmitted in any form, or by any means, electronic, mechanical, photocopying, recording, or otherwise, without prior written permission from FLIR Systems, Inc. Specifications subject to change without further notice. Dimensional data is based on nominal values. Products may be subject to regional market considerations. License procedures may apply. Product may be subject to US Export Regulations. Please refer to exportquestions@flir.com with any questions. Diversion contrary to US law is prohibited.

Camera with Close-up lens 1X (25 µm) incl support

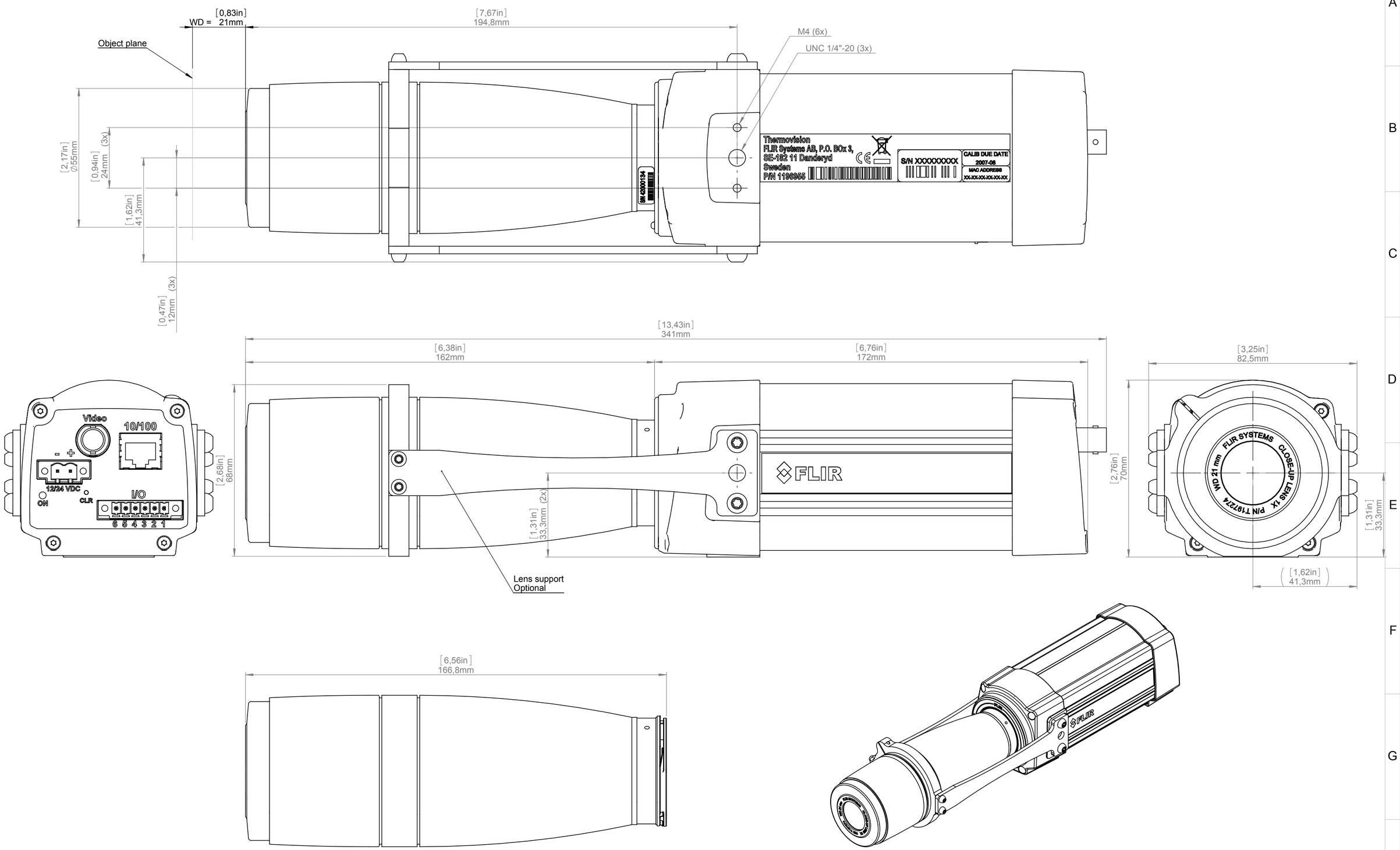

For additional dimensions see page 1

-

Modified	Check	Drawn by	
2012-04-18	CAHA	R&D Thermography	FLIR

Denomination

Basic dimensions FLIR A3xx/SC3xx

-

Size	Scale	Sheet
A3	1:1	6(8)

Drawing No.	Size
T125002	A

© 2012, FLIR Systems, Inc. All rights reserved worldwide. No part of this drawing may be reproduced, stored in a retrieval system, or transmitted in any form, or by any means, electronic, mechanical, photocopying, recording, or otherwise, without written permission from FLIR Systems, Inc. Specifications subject to change without further notice. Dimensional data is based on nominal values. Products may be subject to regional market considerations. License procedures may apply. Product may be subject to US Export Regulations. Please refer to exportquestions@flir.com with any questions. Diversion contrary to US law is prohibited.

Camera with Close-up lens 2X (50 µm)

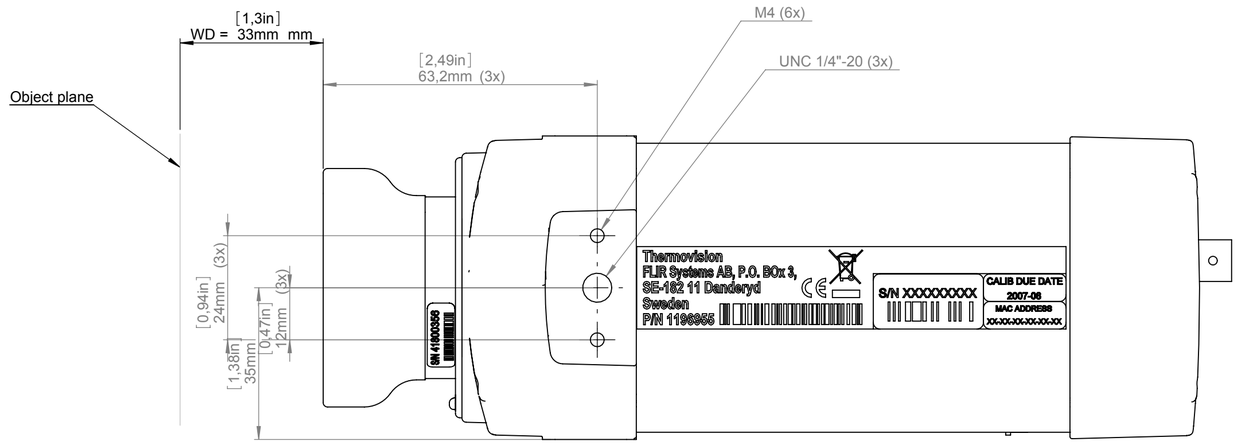

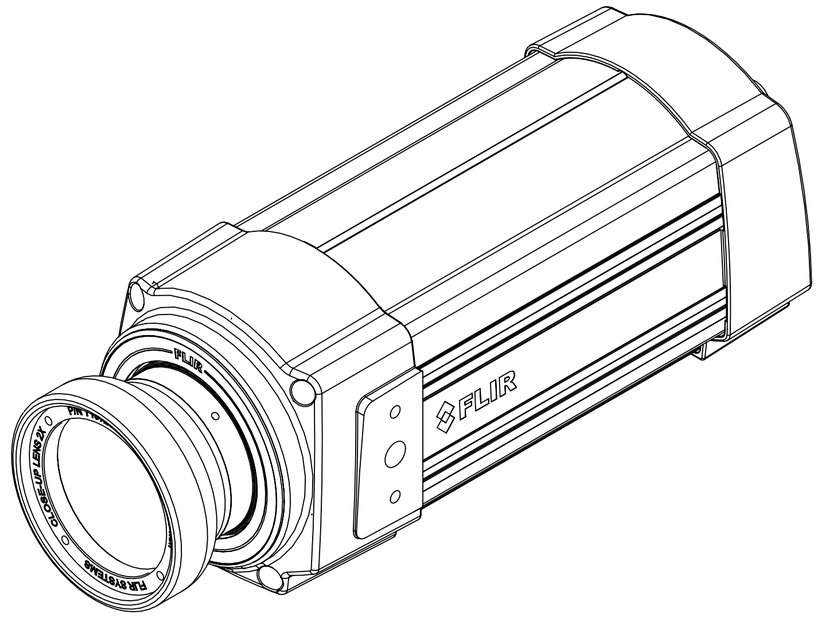

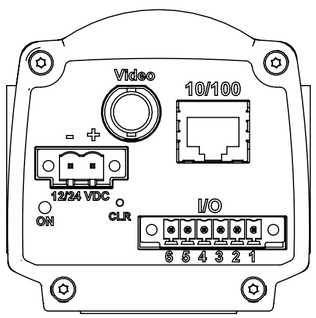

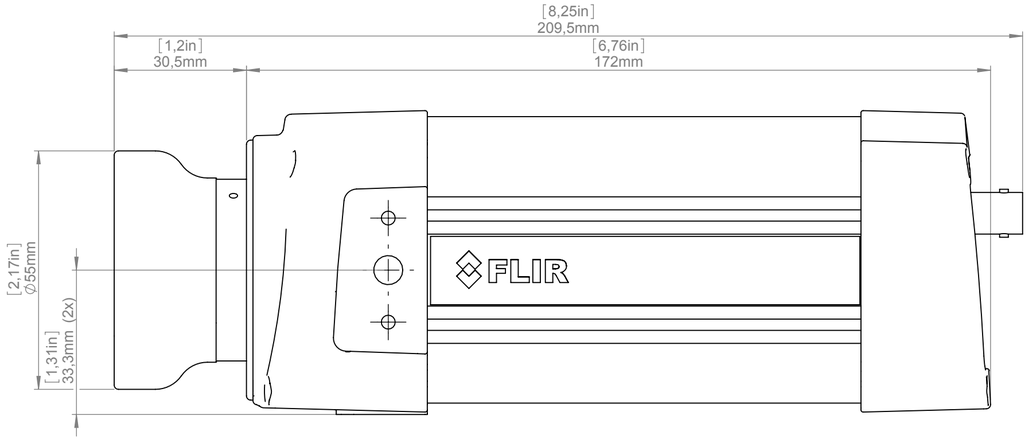

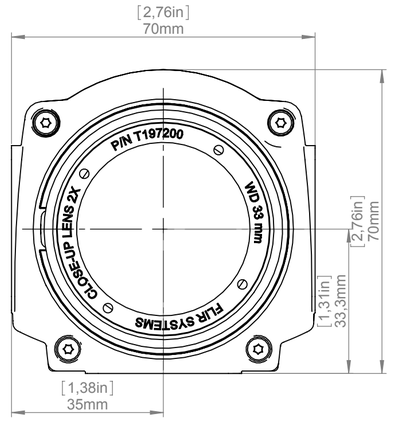

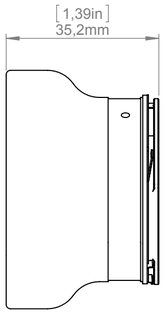

For additional dimensions see page 1

-

Modified	Check	Drawn by	
2012-04-18	CAHA	R&D Thermography	FLIR

Denomination

Basic dimensions FLIR A3xx/SC3xx

-

Size	Sheet
A3	7(8)
Scale 1:1	
Drawing No. T125002	Size A

© 2012, FLIR Systems, Inc. All rights reserved worldwide. No part of this drawing may be reproduced, stored in a retrieval system, or transmitted in any form, or by any means, electronic, mechanical, photocopying, recording, or otherwise, without written permission from FLIR Systems, Inc. Specifications subject to change without further notice. Drawing and data is owned and controlled by FLIR. Products may be subject to regional market considerations. Product may be subject to US Export Regulations. Please refer to exportquestions@flir.com with any questions. Diversion contrary to US law is prohibited.

Camera with Close-up lens 4X (100 µm)

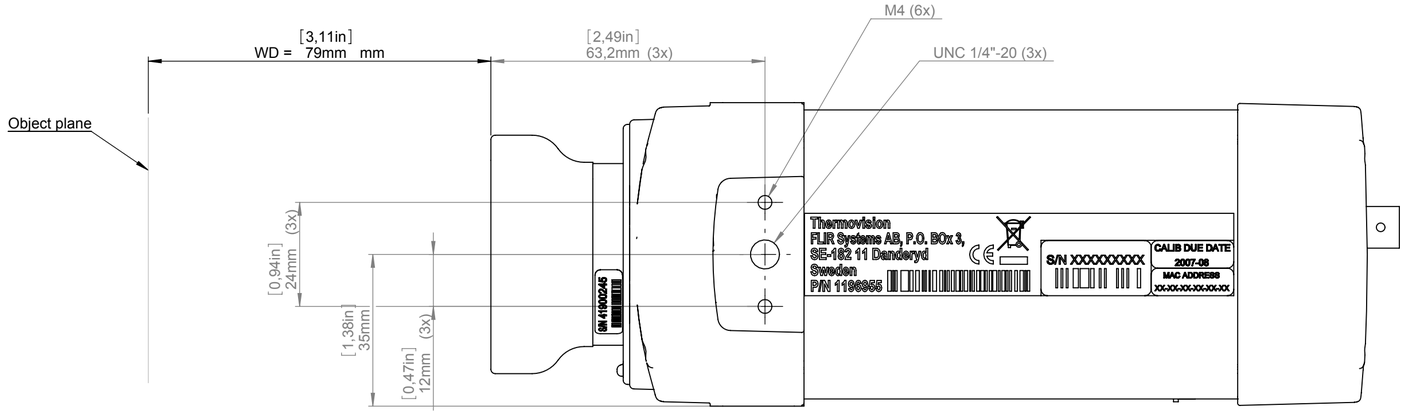

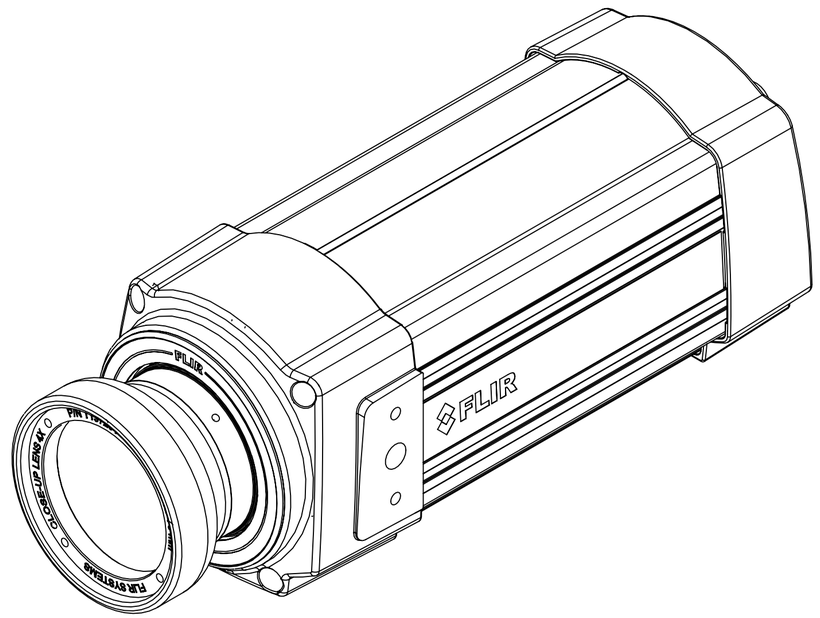

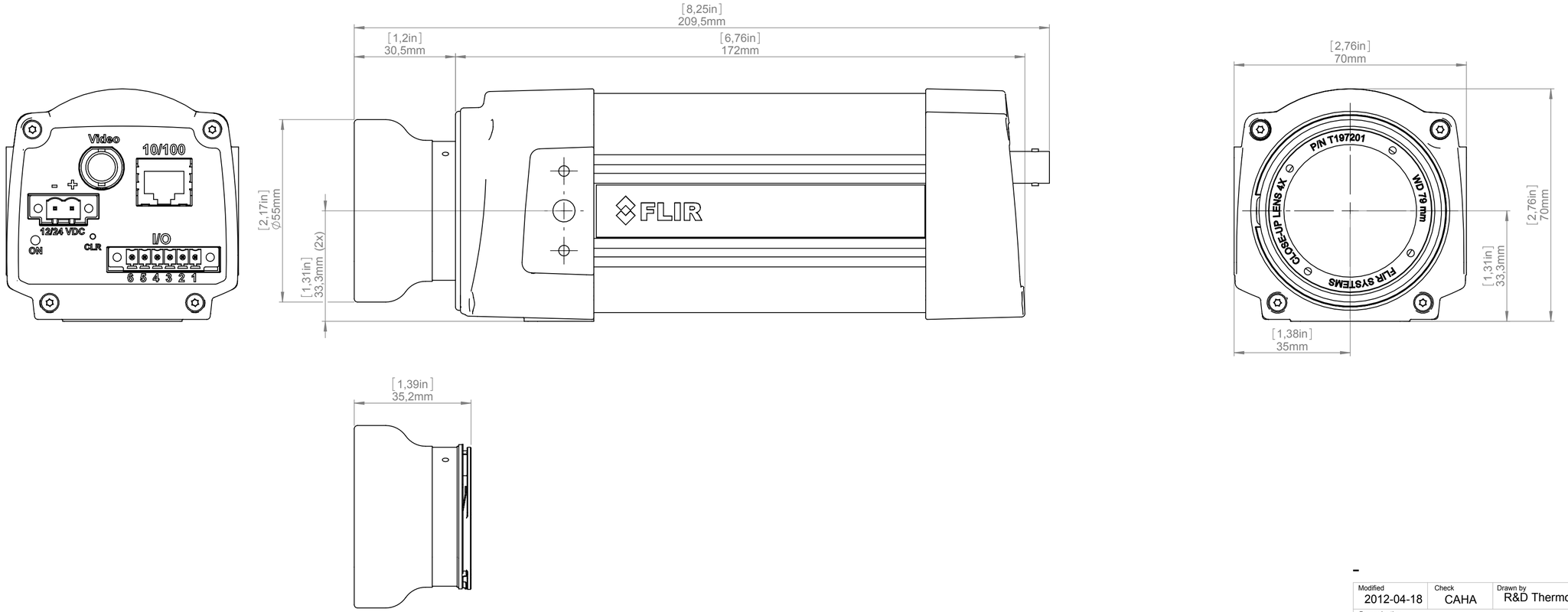

For additional dimensions see page 1

-

Modified	Check	Drawn by	
2012-04-18	CAHA	R&D Thermography	FLIR

Denomination

Basic dimensions FLIR A3xx/SC3xx

-

Size	Scale	Sheet
A3	1:1	8(8)

Drawing No.	Size
T125002	A

© 2012, FLIR Systems, Inc. All rights reserved worldwide. No part of this drawing may be reproduced, stored in a retrieval system, or transmitted in any form, or by any means, electronic, mechanical, photocopying, recording, or otherwise, without written permission from FLIR Systems, Inc. Specifications subject to change without further notice. Dimensional data is based on nominal values. Products may be subject to regional market considerations. License procedures may apply. Product may be subject to US Export Regulations. Please refer to exportquestions@flir.com with any questions. Diversion contrary to US law is prohibited.